Searchline Excel Cross Duct

Honeywell

Reliable infrared open path gas detection for ducts

www.norrscope.com

Cross-Duct Technology

Applications include

- Control rooms
- Personal refuge areas
- Turbine enclosures

Features & benefits

- Fast speed of response provides earliest warning
- High sensitivity allows low alarm set points
- Alignment free design makes installation simple
- Duct flex and vibration tolerance keeps the system online
- Integral functional gas test facility allows for simple system check
- Contamination resistant optics reduce the need for unscheduled maintenance
- Immune to catalytic poisons
- Works in inert atmospheres

Based on the proven open path design, Searchline Excel Cross-Duct was developed in response to the unique requirements for monitoring in HVAC ducting and Turbine Enclosures.

Searchline Excel Cross-Duct delivers the highest speed of response at low alarm set points over a wide temperature range

With continuous improvement and the highest quality manufacturing and control processes, Honeywell Analytics Searchline Excel Open Path flammable gas detector provides best in class gas detection. Searchline Excel is often the chosen primary flammable gas detector in conjunction with Searchpoint Optima Plus as complimenting flammable point detection.

Cross duct flammable gas detectors compliment other system gas protectors such as toxic gas detection, providing a fast and effective protection to gas ingress into ventilation ducts.

Modbus digital output - know before you go!

Searchline Excel is also available as a kit with the XNX Universal Transmitter, featuring both a local HART® port and HART® over 4 to 20mA as standard. These solutions allow configuration of the Searchline Excel through the XNX user interface or using a compatible HART® hand-held interrogator one device. Alternatively, an intrusive connection to the Searchline Excel using an SHC-1 hand-held interrogator together with an SHC-1 protection device module can be made in applications that allow such operations.

The multi drop Modbus capability can enable significant savings in installation and cabling costs. A single comms cable can be run between up to 32 detectors instead of the usual 'single run' required for each detector. Additionally, the 2 way digital communication protocol allows configuration, warning and fault diagnosis information to be communicated back to the control room. This reduces servicing and maintenance costs as the operator can diagnose the state of any individual unit before deciding to send anyone into the field.

Technical Summary
Searchline Excel Cross-Duct

Specification	
Available Gas Calibrations	Methane (gas mixtures where methane is the main constituent (>70%) and the balance is C_2 - C_6 hydrocarbons)*
Detection Range	0-100% LEL
Minimum Alarm Thresholds	20% LEL (>0.5 to 2.5m duct width) 10% LEL (>2.5m to 5m duct width)
Speed of Response	T90 < 1 second
Output Signals	Measuring range: 4-20mA sink or source (Default current source) Over range: 21mA Warning: 3mA Beam Block: 2.5mA Inhibit: 2mA Fault: 0mA
Diagnostics	RS485 serial link
Digital Output	Modbus RS485 multi drop. (Using DX100(M) or XNX Universal Transmitter with Modbus option)
Operating Temperature	-40°C to +50°C (-40°F to 122°F) ambient. An internal duct temperature of up to 60°C (140°F) is acceptable, provided the ambient temperature outside the duct at the Transmitter and Receiver unit is within the operating range. Contact Honeywell Analytics for high temperature applications
Operating Humidity	0-99% (non condensing)
Operating Pressure	91.5-105.5 kPa (non compensated)
Repeatability	5.0% LEL (<1 metre duct width) 2.5% LEL (>1 metre duct width)
Warm-up Time	<1 hour (fully stabilised)
Power Supply	Unit: 18 to 32V dc Heated Reflector Panel: 18 to 28V dc
Power Consumption	Unit: 13W max. Heated Reflector Panel: 6W (nom) @ 24VDC
Enclosure Material	316 Stainless steel
IP Rating	IP66 and IP67
Weight	Transceiver 13kg, reflector panel 5kg (>0.5m to 2.5m duct width), 10kg (>2.5 to 5.0m duct width)
Vibration	2-60Hz, max ptp amplitude 1mm
EMC Standards	EN50270
Safety Approvals	**ATEX** Transmitter: Ⓔx II 2 G Ex d op is IIC T5 (Tamb -40°C to +65°C) Gb Ⓔx II 2 G Ex d op is IIC T6 (Tamb -40°C to +40°C) Gb Receiver: II 2 G Ex d IIC T5 (Tamb -40°C to +65°C) Gb II 2 G Ex d IIC T6 (Tamb -40°C to +40°C) Gb **IECEx** Transmitter: Ex d op is IIC T5 (Tamb =-40°C to +65°C) Gb Ex d op is IIC T6 (Tamb =-40°C to +40°C) Gb Receiver: Ex d IIC T5 (Tamb -40°C to +65°C) Gb Ex d IIC T6 (Tamb -40°C to +40°C) Gb UL: Class 1 Groups B, C, D and Class 1 Zone 1 AEx d IIB + Hydrogen (Amb -40°C to +65°C) **Heated Panel** ATEX: Ⓔx II 2 G Ex d IIC Gb T3 (T_{amb} -40°C to +60°C) UL: Class 1, DIV 1, Groups B, C, D T_{amb} -40°C to +60°C
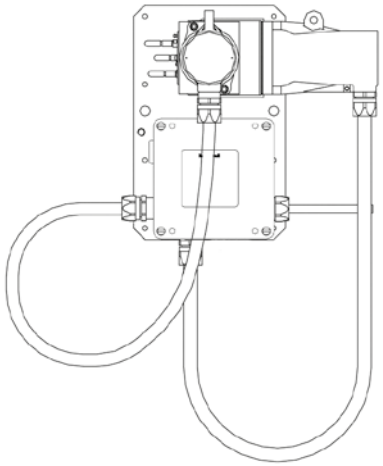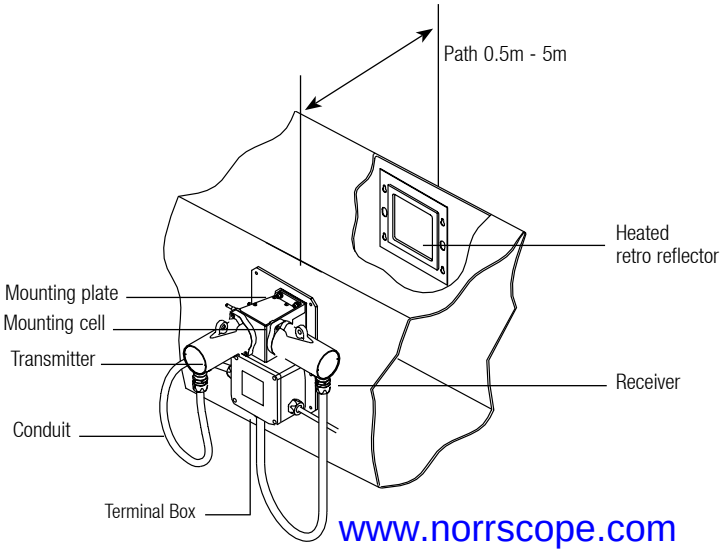
*Contact Honeywell Analytics for other gases and approvals